Model No. DC18RC CHARGER

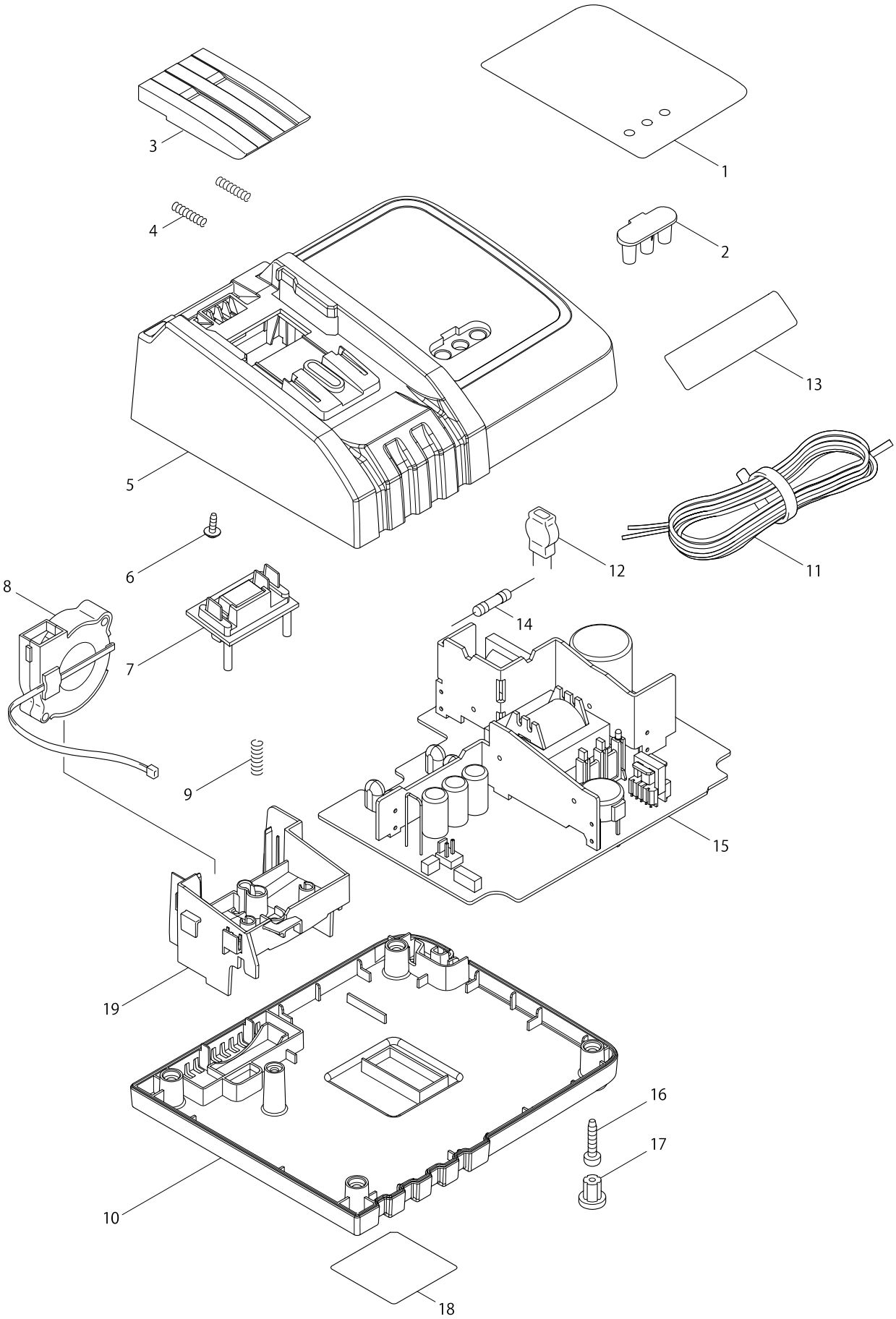

Model No. DC18RC CHARGER

Item	Parts No.	Description	I/C	Qty	N/O	Opt. 1	Opt. 2	Note
001	892752-5	CHARGING CONDITION LABEL		1				
002	452661-6	LENZ		1				
002A_	452862-6	LENS		1				
003	419569-7	TERMINAL COVER		1	*			
003-1	455546-5	TERMINAL COVER	<	1				
004	231474-6	COMPRESSION SPRING 4		2				
005	140824-3	CHARGER CASE COMPLETE		1				
D10		INC. 2						
005A_	140977-8	CHARGER CASE COMPLETE		1				
D10		INC. 2A						
006	266278-7	TAPPING SCREW FLANGE BT3X10		1				
007	638847-8	TERMINAL UNIT		1	*			
007-1	638847-8	TERMINAL UNIT	O	1				
007A_	638987-2	TERMINAL UNIT		1				
008	638499-5	SCIROCCO FAN		1				
009	233194-8	COMPRESSION SPRING 4		1				
010	452659-3	CHARGER CASE COVER		1				
010A_	452860-0	CHARGER CASE COVER		1				
011	667985-9	VINYL CORD 0.75-2-2.0		1				
011A_	667884-5	POWER SUPPLY CORD		1	*			
011A1	667985-9	VINYL CORD 0.75-2-2.0	<	1				
012	647306-1	VARISTOR		1				
014	652797-3	FUSE		1				
014A_	652800-0	FUSE		1				
015	620067-8	CHARGING CIRCUIT		1				
D10		INC. 12,14						
015A_	620120-0	CHARGING CIRCUIT		1				
D10		INC. 12,14A						
016	266346-6	TAPPING SCREW BT 4X20		5	*			
016-1	266346-6	TAPPING SCREW BT 4X20	O	4				
016A_	266426-8	TAPPING SCREW 4X20		4				
017	286255-3	CAP 13		4				
018	869949-1	DC18RC T NAME PLATE		1				
019	452660-8	TERMINAL BASE		1				
019A_	452861-8	TERMINAL BASE		1				
020	266346-6	TAPPING SCREW BT 4X20		1				
020A_	266764-8	TAPPING SCREW 3X8		3				

Please order the parts with a part number.

Print Date 24/08/2016